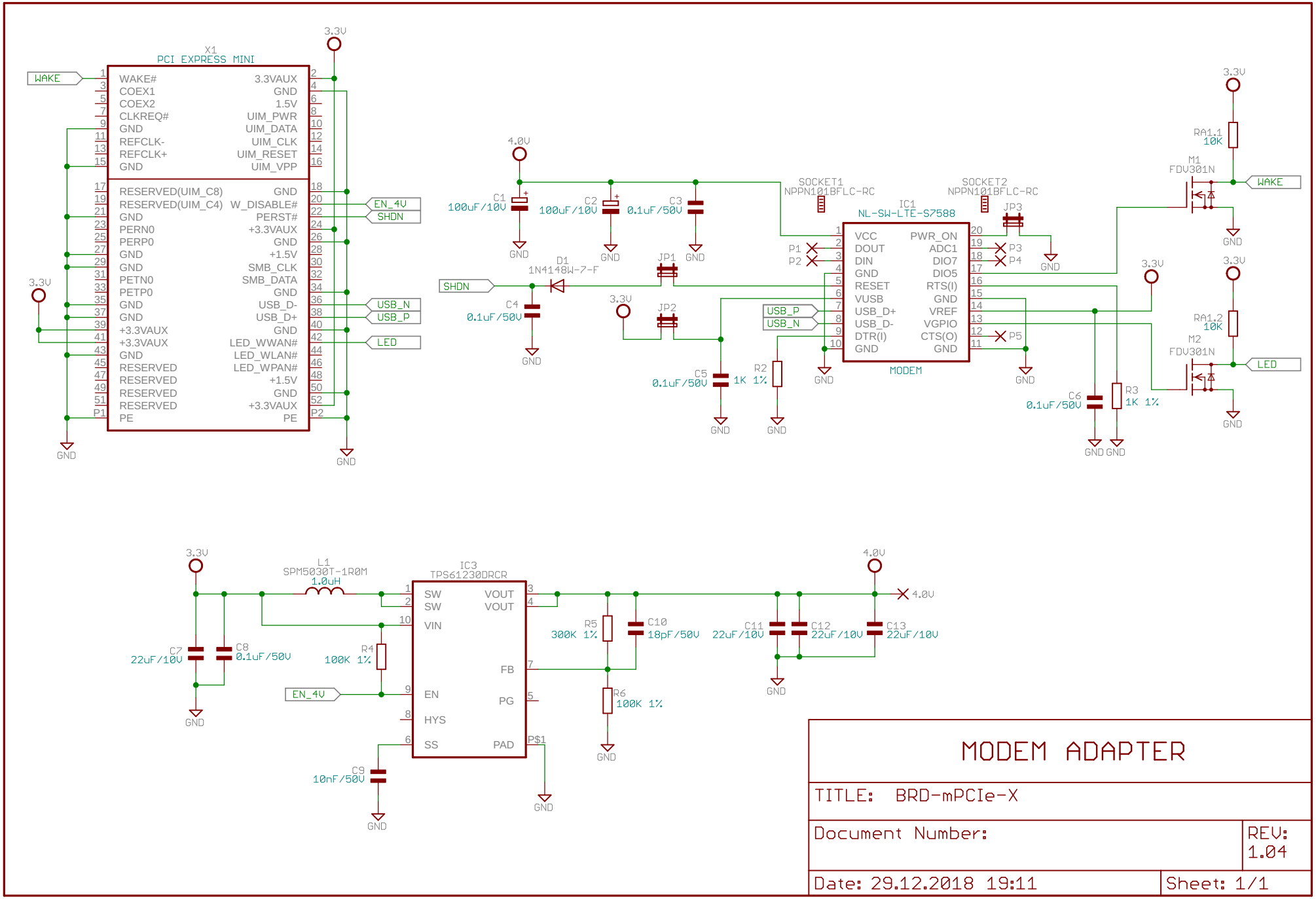
X1
PCI EXPRESS MINI
WAKE
WAKE#
COEX1
COEX2
CLKREQ#
GND
REFCLK-
REFCLK+
GND
3.3VAUX
GND
1.5V
UIM_PWR
UIM_DATA
UIM_CLK
UIM_RESET
UIM_VPP
RESERVED(UIM_C8)
RESERVED(UIM_C4)
GND
PERN0
PERP0
GND
GND
PETN0
PETP0
GND
GND
+3.3VAUX
+3.3VAUX
GND
RESERVED
RESERVED
RESERVED
RESERVED
PE
GND
W_DISABLE#
PERST#
+3.3VAUX
GND
+1.5V
SMB_CLK
SMB_DATA
GND
USB_D-
USB_D+
GND
LED_WWAN#
LED_WLAN#
LED_WPAN#
+1.5V
GND
+3.3VAUX
PE
EN_4V
SHDN
USB_N
USB_P
LED
3.3V
GND
4.0V
C1
100uF/10V
C2
100uF/10V
C3
0.1uF/50V
D1
1N4148W-7-F
C4
0.1uF/50V
JP1
JP2
SOCKET1
NPPN101BFLC-RC
SOCKET2
NPPN101BFLC-RC
IC1
NL-SW-LTE-S7588
VCC
DOUT
DIN
GND
RESET
VUSB
USB_D+
USB_D-
DTR(I)
GND
PWR_ON
ADC1
DIO7
DIO5
RTS(I)
GND
VREF
VGPIO
CTS(O)
GND
MODEM
JP3
P1
P2
P3
P4
P5
C5
0.1uF/50V
R2
1K 1%
C6
0.1uF/50V
R3
1K 1%
RA1.1
10K
RA1.2
10K
M1
FDV301N
M2
FDV301N
L1
SPM5030T-1R0M
1.0uH
IC3
TPS61230DRCR
SW
SW
VIN
EN
HYS
SS
VOUT
VOUT
FB
PG
PAD
P$1
C7
22uF/10V
C8
0.1uF/50V
R4
100K 1%
C9
10nF/50V
R5
300K 1%
R6
100K 1%
C10
18pF/50V
C11
22uF/10V
C12
22uF/10V
C13
22uF/10V
MODEM ADAPTER
TITLE: BRD-mPCIe-X
Document Number:
REV: 1.04
Date: 29.12.2018 19:11
Sheet: 1/1